Design Rules

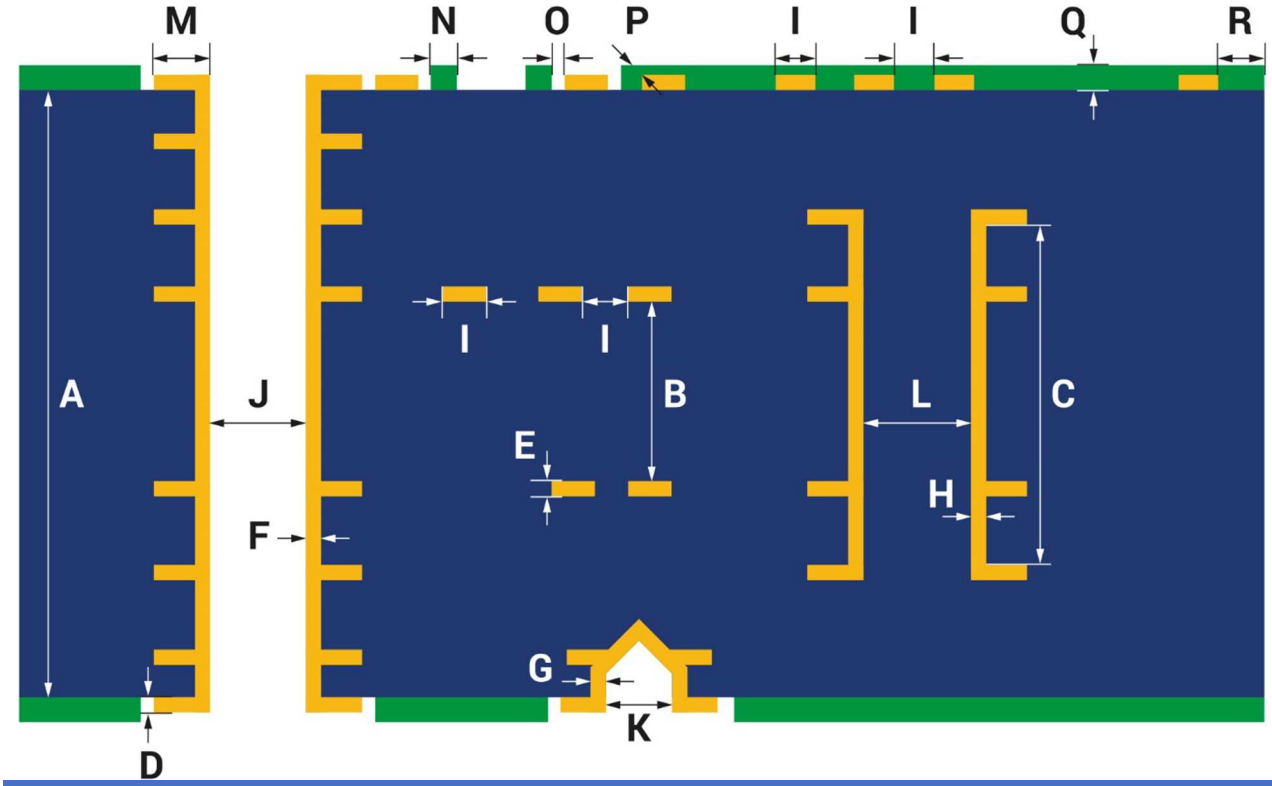

Symbol	Parameter	Value
A	PCB thickness (tolerance ±10%)	0,20 – 4,50 mm
B	Min. core thickness without buried vias	0,10 mm
C	Min. core thickness with buried vias	0,20 mm
D	Cu layer thickness outer layer	35 µm – 435 µm
E	Cu layer thickness inner layer	18 µm – 400 µm
F	Cu layer thickness drill shell	> 20 µm
G	Cu layer thickness connection blind vias	> 17 µm
H	Cu layer thickness buried vias	> 20 µm
I	Trace width / trace distance (for outer and inner layers)	
	18 µm basic copper	100 µm / 100 µm
	35 µm basic copper	120 µm / 120 µm
	70 µm basic copper	150 µm / 150 µm
	105 µm basic copper (see drawing etching characteristics)	250 µm / 250 µm
	210 µm basic copper (see drawing etching characteristics)	500 µm / 500 µm
	400 µm basic copper (see drawing etching characteristics)	800 µm / 800 µm
J	Min. drilling end diameter (throughole)	0,15 mm
	Aspect Ratio PCB thickness to drill end diameter	8:1
K	Min. drilling end diameter blind vias	0,15 mm
	Aspect Ratio drilling end diameter to drilling depth	1:1
L	Min. drilling end diameter buried vias	0,15 mm
	Aspect Ratio PCB thickness to drill end diameter	8:1
M	Residual ring width all around	0,15 mm
N	Min. bridge soldermask	100 µm
O	Min. exemption soldermask	50 µm
P	Min. edge coverage soldermask	> 8 µm
Q	Thickness soldermask	> 20 µm
R	Min. distance trace to PCB edge (milling / scoring)	0,30 mm / 0,50 mm

Design Rules

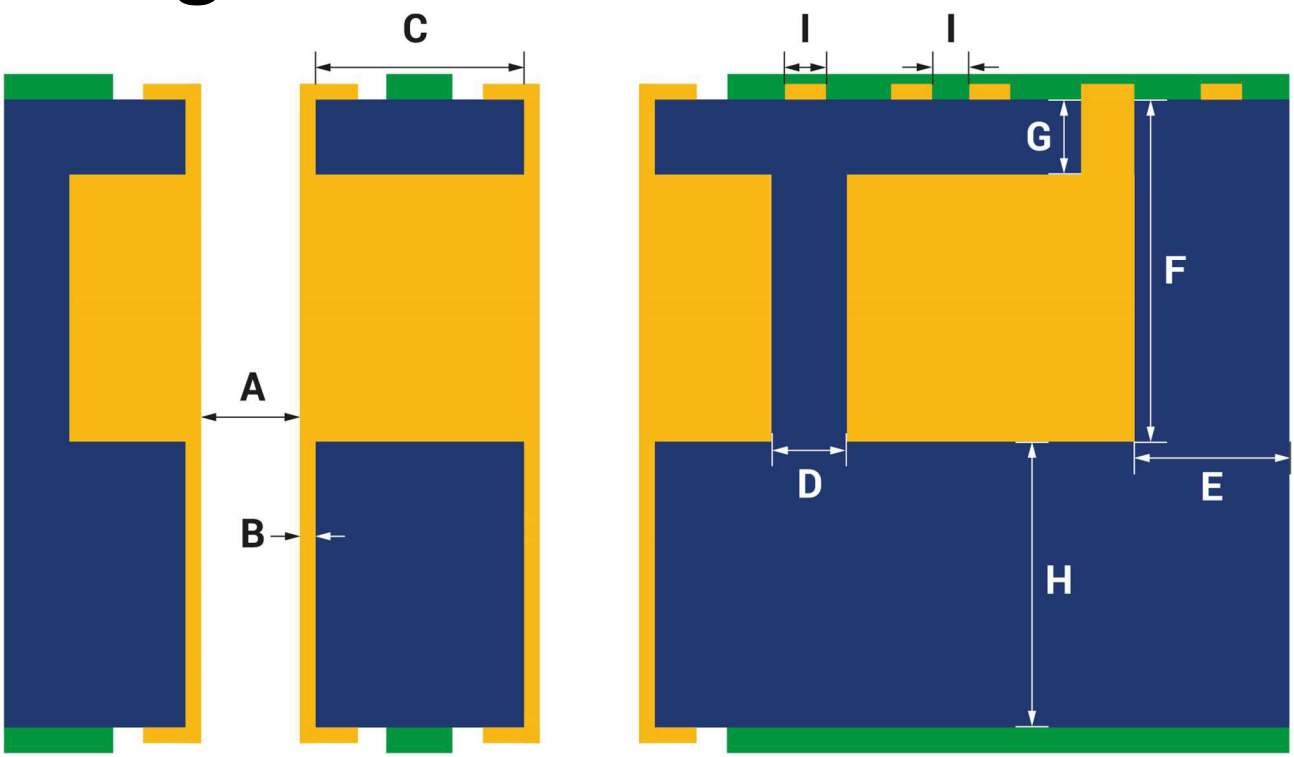

Symbol	Parameter for Copper-Inlay-Technic	Value
A	Min. drilling end diameter	0,70 mm
B	Cu layer thickness drill shell	> 20 µm
C	Drilling distance	> 0,20 mm
D	Distance between Cu-Inlays	> 2,00 mm
E	Distance PCB edge to Cu-Inlay	0,00 µm
F	Total thickness Cu-Inlay	0,50 mm – 2,00 mm
G	Humph high	> 0,20 mm
H	Isolation on Cu-Inlay	> 0,20 mm

Etching characteristics

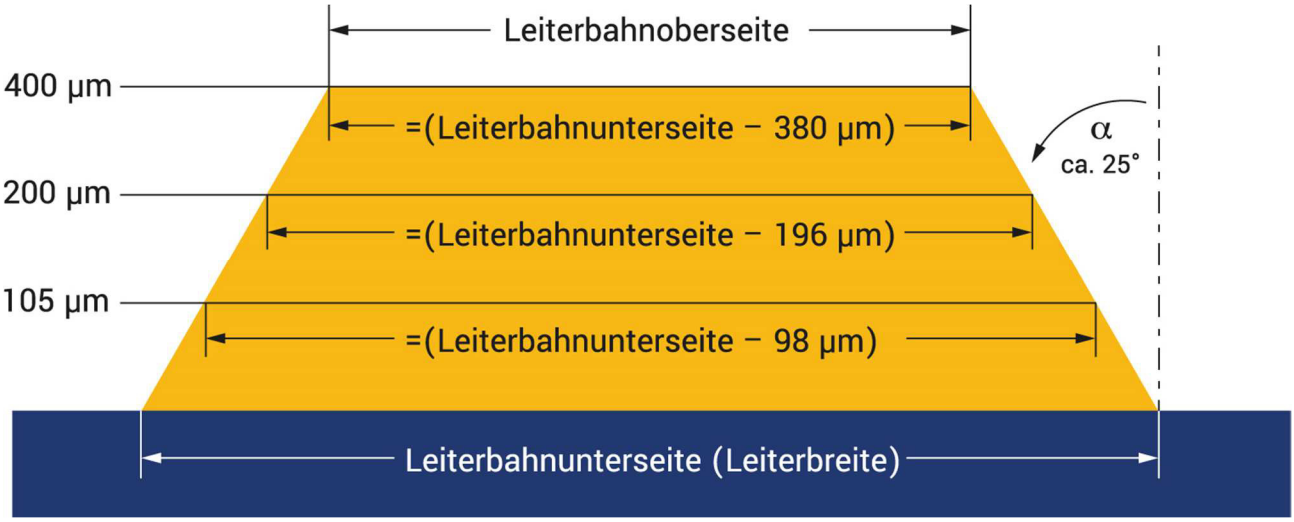

EINFACH KANN JEDER.
WIR SIND DIE SPEZIALISTEN FÜR KOMPLEXE LEITERPLATTEN.

IHR SPEZIALIST FÜR: Prototypen | Kleinserien & Muster | Express-Service | individuelle Fertigung | hohe Flexibilität | 100% Made in Germany

www.becker-mueller.de

BECKER MÜLLER

A name. A claim.

Becker & Müller is the competent partner for all your PCB. The highest quality, speed and reliability are among the most important factors.

➔ High quality

100% made in Germany! Exclusive in-house production according to strict quality guidelines.

➔ High speed

Minimum delivery times in **express-service** with maximum delivery reliability.

➔ High flexibility

Individual solutions for special customer requests.

Our online services

In order to make the processing of your PCB procurement – from development to ordering to delivery – as simple and effective as possible, we offer our customers a range of practical online services.

Visit our website and benefit from services such as:

- online calculator
- order forms
- query the production and shipping status of your orders
- calculating tools for
  - impedance
  - current carrying capacity
  - temperature increase
  - conductor dimension
  - copper strength

Our team will of course be happy to provide you with personal advice. Contact us!

KONTAKT

Becker & Müller Schaltungsdruck GmbH
Bildstöckle 11
77790 Steinach i.K.
Telefon: +49 (0)7832 9180-0
Telefax: +49 (0)7832 9180-35
brief@becker-mueller.de