Content

Becker & Müller Schaltungsdruck GmbH 2
Circuit boards 3
Express-Service 4
Base materials 5
Surfaces 6
Conductor image 6
Mechanical processing 7
Special-Services 8
Design Rules 9
Quality assurence 12

KONTAKT

Becker & Müller Schaltungsdruck GmbH
Bildstöckle 11
77790 Steinach i.K.
Telefon: +49 (0)7832 9180-0
Telefax: +49 (0)7832 9180-35
brief@becker-mueller.de

Becker & Müller Schaltungsdruck GmbH

Keyfacts:

- Prototype production, small series & samples – since 1985
- 1,750 m^2 production area
- 23 employees
- certifications and conformities:
  - **DIN EN ISO 9001:2015**
  - **DIN EN ISO 14001:2015**
  - **UL**
  - **RoHS and REACH**

A NAME. A CLAIM.

HIGH QUALITY

- Top quality made in Germany
- 100% in-house production
- Direct contact person on site

HIGH SPEED

- Minimum delivery time in express-service
  - 8 h for single and double sided PCB
  - 1 wd for multilayer (2 wd for series)
- Maximum delivers fidelity >97%

HIGH FLEXIBILITY

- Lot size from quantity 1
- Customized production strategies
- Customized solutions
- Technical advice in the DFM-process

Weitere Services

- Online calculator
- Online order and inquiry form
- Online query production status and shipping status
- Online impedance calculator
- Download datasheets

Circuit boards

Becker & Müller Schaltungsdruck GmbH	
Double sided PCB	• Delivery time from 8 h
Multilayer	• Delivery time from 1 wd • Up to 24 layers • High layered multilayers on request
Flex- & Rigid-Flex- and Semi-Flex PCB	• Covering with special flex solder resist or coverlay • Multilayer structure
High-Frequency PCB	• Various HF materials available from stock • PCB thickness PTFE up to 6.0 mm
High-Current PCB	• Copper layer up to 1,000 µm on inner and/or outer layer • Copper foil in thcknesses 105/200/400/1,000 µm • Copper-Inlay-Technology on request
High-Tg PCB	• Various high-Tg materials available from stock
Impedance-Controlled PCB	• Precise calculation using Polar Instruments Software • Approx. online impedance calculation possible • (Standard-)tolerance ±10% • Control / measurement using representative test coupon
IMS PCB	• 1-L PCB • Metal carrier substrate (Insulated Metallic Substrate)
SMD-Stencils	• Delivery time from 6 h • Thicknesses 80/100/120/150 µm • Optimum accuracy of fit for the manufactured PCB

General information:

- Max. size
  - ≤ 2-L: 427 x 884 mm
  - > 2-L: 370 x 496 mm
- Max. PCB thickness up to 8,0 mm

Express-Service

The fastest possible delivery times in the PCB Express-Service (for data delivery by 9:00 a.m.) can be found in the following table:

PCB-Type	Express delivery time samples	Express delivery time series	Standard delivery time samples	Standard delivery time series
≤ 2L	8 h	1 wd	5 wd	8 wd
> 2L	1 wd*	2 wd**	6 wd	10 wd
Starr-Flex	5 wd	8 wd	10 wd	15 wd
SMD-Sencil	6 h	-	6 wd	-

*data delivery before 2:00 p.m. the day before
**on request

Note: When shipping to non-EU countries (e.g. CH), delivery may vary depending on customs clearance.
Specifications apply to HAL and ch. Sn surface, different coatings +2 wd

In addition to the PCB Express-Service, we offer the option of checking the production status and shipping status of your order online and in real time. This service is of course also available for orders with standard delivery times.

Base materials

To ensure that we can meet our promised fast delivery times, we have an extensive stock of base materials. In addition to common standard materials, various exotic base materials of different dimensions and thicknesses as well as prepregs and copper foils are available directly from stock. The following material types are permanently in stock:

- FR4
- High-Tg 135/150/170°C
- Rogers 4000er Series
- PTFE
- Polyimide
- IMS (aluminum core)
- CEM-1
- More on request

Here is a selection of our standard materials:

PCB-Type	Standard basematerials
≤ 2L	• KB-6160 (Tg 135°C) • Nanya FR4-86 (Tg 145°C) • EM370(5)DM (Tg 150°C) • EM 827 (Tg 175°C)
> 2L	• EM370(5)DM (Tg 135°C) • NPG-150N (Tg 150°C) • EM370(Z) (Tg 190°C)
High-frequency PCB	• RO4000 Series • More on request
FLEX	• DuPont Pyralux AP Series • More on request
IMS	• EM-MP
PCB-Type	**Soldermask**
Rigid	• green (Elpemer 2467), standard soldermask • white (Elemer SD 2491 SM-TSW), standard silkscreen • black (Elpemer SD 2447 SM) • blue (Elpemer SD 2457 SM) • more on request
FLEX	• PSR-9000 FLX5010R

Surfaces

The following end surfaces are available for coating:

- **HAL** lead-free (Hot Air Leveling)
- **chem. Sn**
- **chem. Ag**
- **chem. Ni/Au** (ENIG – Electroless Nickel Immersion Gold)
- **chem. Ni/Pd/Au** (ENEPIG – Electroless Nickel Electroless Palladium Immersion Gold)
- **chem. Pd/Au** (EPIG – Electroless Palladium Immersion Gold)
- **galv. Ni/Au** (hard gold)
- **galv. Au** (fine gold)
- **Entek** (OSP – Organic Solderability Preservative)

Conductor image

Becker & Müller uses an LED-DI direct exposure unit to expose the conductor image. Direct exposure offers numerous advantages for prototyping:

- **Maximum quality** of the PCB thanks to maximum precision and manufacturing accuracy
- **Maximum flexibility** and **environmental fiendliness** thanks to filmless exposure
- **Maximum speed** thanks to short reaction times and fast product changes

The software-supported LED direct exposure also enables targeted alignment and dimensional compensation of the layout. Conductor structures on inner and outer layers can thus be adapted to the drilling pattern and offset or distortion of the inner layers pressed multilayer. This solution enables extremely fine structures of <75 µm. The structures that can be safely produced, depending on the selected base copper, can be found in the **Design Rules** (p. 9). Other copper layer thicknesses or more delicate structures are possible on request.

Mechanical processing

Drilling type	Diameter [mm]	Tolerance [mm]*
PTH	0.15 – 2.00 2.10 – 6.20 >6.20	+0.15 / -0.05 +0.20 / -0.05 ±0.20
NPTH	0.15 – 6.20 >6.20	+0.10 / -0.05 ±0.20
Tools	• Diameter from 0.15 – 6.20 mm available • Drillings >6.20 mm are milled • Smaller diameters on request	
Contours	**Dimensions [mm]**	**Tolerance [mm]***
Milling & Scoring	0.50 – 6.00 6.00 – 30.00 >30.00	±0.10 ±0.15 ±0.20
Tools	• Milling tools from 0.40 – 3.00 mm available • Special tool geometrics on request	

*more precise tolerances on request

Note: Max. Aspect-Ratio Via: 1:10
Max. Aspect-Ratio Blind-Via: 1:1

Special-Services

Service	Specification
Hybrid-Structures	Multilayers can be assembled as hybrids from different base materials
Blind Via	Aspect-Ratio max. 1:1
Buried Via	Aspect-Ratio max. 1:10
Plugging	Typ VII (filled and closed) More variants on request
Bluemask	Masking or strippable lacquer
Via-filling	Vias filled with solder resist
Abdeckfolie	Coverlay on PCB outer layer
Special contours Lowering Z-Axis milling	Special contours PTH or NPTH Lowering PTH or NPTH Z-Axis milling PTH and NPTH
Mechanical precision on request	Position tolerance drilling to conductor pattern ±20 µm Dimensional tolerance ±20 µm Tolerance contour / Z-Axis milling ±50 µm
Plug	Plug galvanically (hard) gold-plated Chamfer possible on both sides at different angles
Heatsinks and metal carrier	PCB connection with external heatsink, metal support or ceramic block possible
Other	More special technologies on request

Design Rules

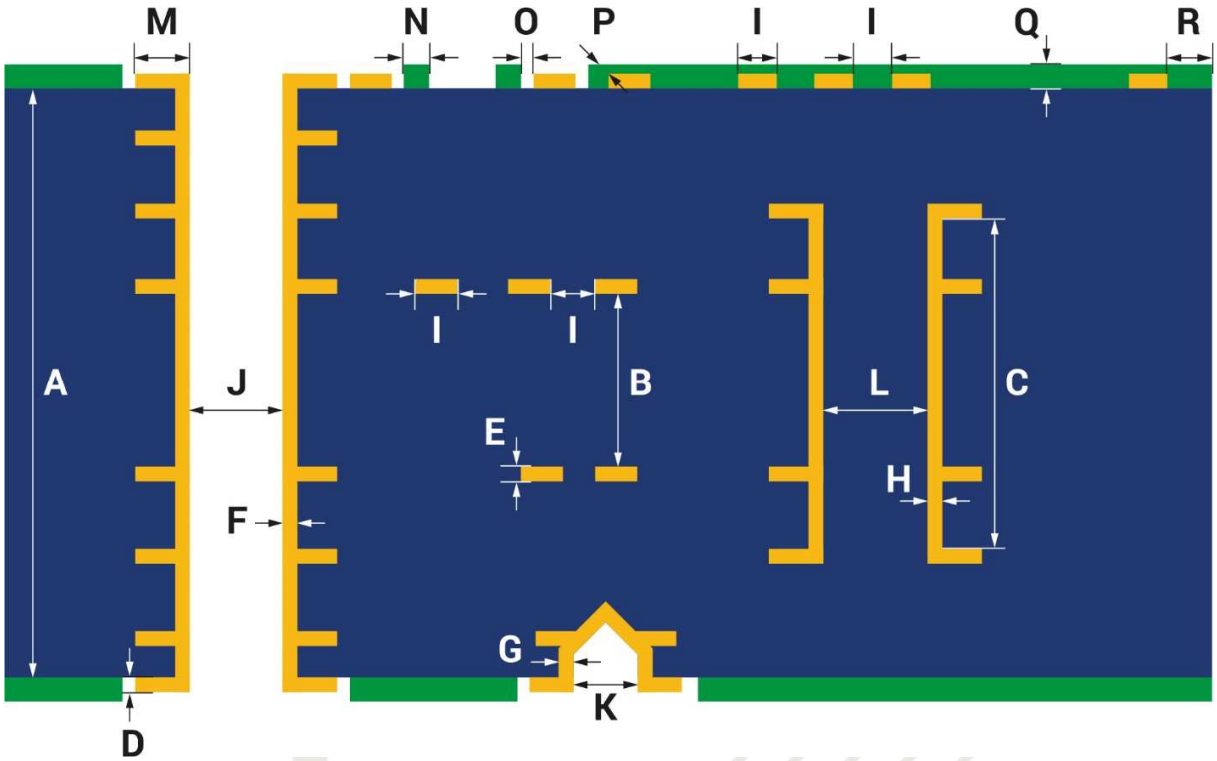

Symbol	Parameter	Value
A	PCB thickness (tolerance ±10%)	0.20 – 4.50 mm
B	Min. core thickness without Buried Vias	0.10 mm
C	Min. core thickness with Buried Vias	0.20 mm
D	Cu layer thickness outer layers	35 µm – 435 µm
E	Cu layer thickness inner layers	18 µm – 400 µm
F	Cu layer thickness drilling sleeve	> 20 µm
G	Cu layer thickness connection Blind Vias	> 17 µm
H	Cu layer thickness Buried Vias	> 20 µm
I	Conductor width / conductor spacing for outer and inner layers	
	18 µm base copper	75 µm / 75 µm
	35 µm base copper	120 µm / 120 µm
	70 µm base copper	150 µm / 150 µm

I	105 µm base copper (see drawing etching characteristics)	250 µm / 250 µm
	210 µm base copper (see drawing etching characteristics)	500 µm / 500 µm
	400 µm base copper (see drawing etching characteristics)	800 µm / 800 µm
J	Min. drill end diameter (through hole)	0.15 mm
	Aspect-Ratio PCB thickness to drilling end diameter	8:1
K	Min. drilling end diameter Blind Vias	0.15 mm
	Aspect-Ratio drilling end dameter to drilling depth	1:1
L	Min. drilling end diameter Buried Vias	0.15 mm
	Aspect-Ratio PCB thickness to drilling end diameter	8:1
M	Restring width circumferential	0.15 mm
N	Min. bridge solder resist	100 µm
O	Min. exemption solder resist	50 µm
P	Min. edge cover solder resist	> 8 µm
Q	Thickness solder resist	> 20 µm
R	Min. distance between conductor pattern and PCB edge (milling / scoring)	0.30 mm / 0.50 mm

Etching characteristics

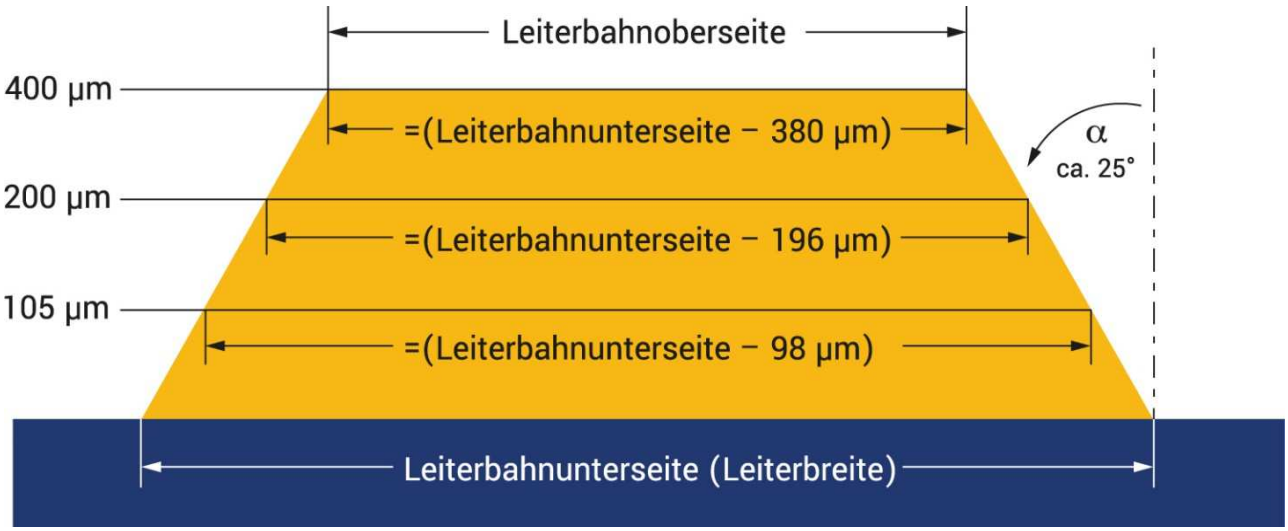

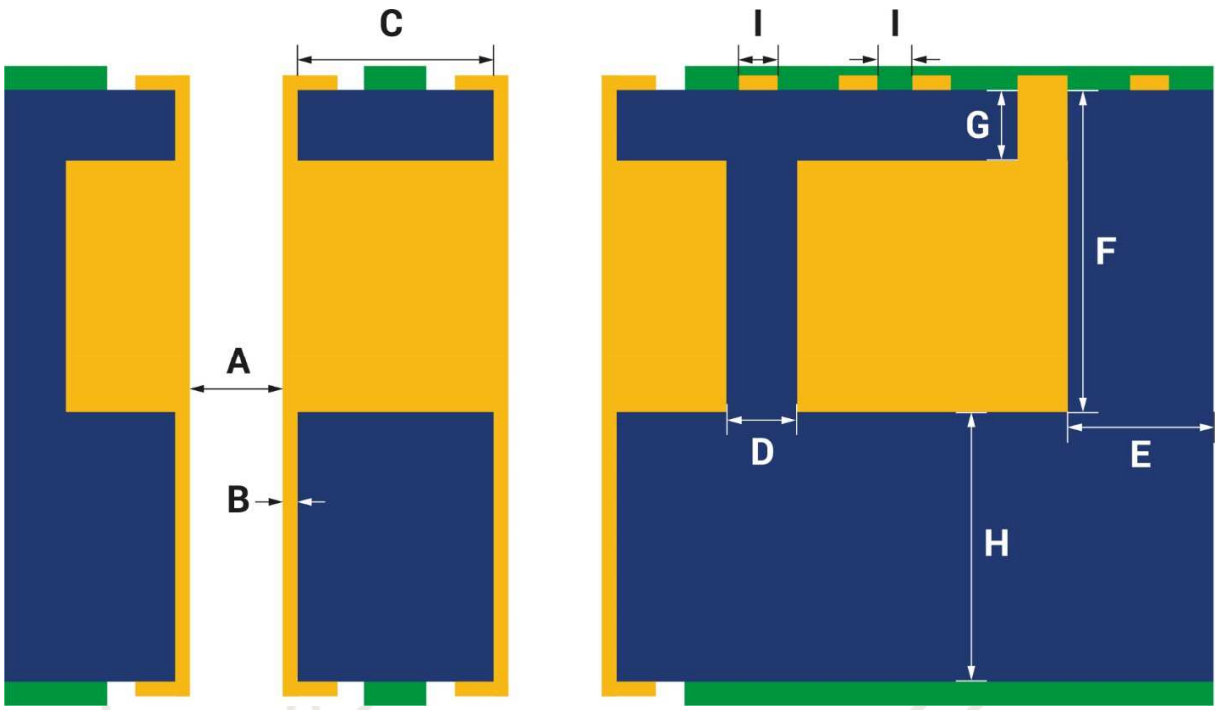

Symbol	Parameter for Copper-Inlay-Technology	Value
A	Min. drilling end diameter	0.70 mm
B	Cu layer thickness drilling sleeve	> 20 µm
C	Drill hole spacing	> 0.20 mm
D	Distance between Inlays	> 2.00 mm
E	Distance PCB edge to Inlay	0.00 µm
F	Total thickness Cu-Inlay	0.50 mm – 2.00 mm
G	Hump height	> 0.20 mm
H	Insulation on Cu-Inlay	> 0.20 mm

Quality assurence

Quality is our top priority. Our production is qualified according to the **quality management system requirements DIN EN ISO 9001:2015**. Quality control accompanies the entire manufacturing process of our PCBs, the test standard is **IPC-A-600 Class II** - of course, testing according to Class III is also possible.

Parallel to production, the PCB are subjected to various standard checks and undergo the following measurements and tests, depending on customer requirements:

Check		
Intermediate and final inspection	Visual inspections after relevant processing steps are supplemented by final inspection	100% of panels and finished PCB
AOI	Automatic Optical Inspection (outer and inner layers)	100%
E-Test	Elektric test	100% Multilayer
Layer offset control	Registration inner layers + X-Ray-Check	100% Multilayer
Dimensional compensation	Distortion and misalignment of inner layers by multilayer press is recorded and compensated	100% Multilayer
Impedance control	Testing / measurement incl. Measurement protocol using test coupons	optional
Mechanical tolerances	Inspection / measurement incl. Measurement report of drilling and conductor pattern using a CNC video measuring microscope	optional
micrographs	Incl. layer thickness measurement	optional
Initial sample test report	Preparation of initial sample test report	optional